Technical Specifications

Parameters

Machine			S35
Engine			Isuzu C240N Diesel Engine
Rated Power / r.p.m		**kW**	34.7 / 2500
Rated Torque / r.p.m		**N-m**	138.5 / 1800
Number of Cylinders			4
Fuel Tank Capacity		**l**	70
Transmission			Power-shift
Load Capacity		**kg**	3500
Load Center		**mm**	500
Wheels (x = driven)	**Front/Rear**		2x/2

Operating Weight		**kg**	4580
Tires	**Size**	**Front**	28*9-15
		Rear	6.50-10
Wheelbase (J)		**mm**	1750
Tread	**Front**	**mm**	1000
	Rear	**mm**	970
Overhead Guard Clearance		**mm**	1005
Counterweight Height		**mm**	1110
Underclearance (B)		**mm**	135
Brake			Hydraulic Foot Pedal
Battery		**V/AH**	12/64

Dimensions

Max. Fork Height (A)		**mm**	3000
Free Lift		**mm**	80
Fork Size (K, M, L)	**LxWxT**	**mm**	1220x122x50
Fork Spread (P)	**Max./Min.**	**mm**	1020/245
Tilt Angle	**Fwd./Bwd.**	**deg.**	6/12
Overall Length (D)		**mm**	3800
Overall Width (E)		**mm**	1230
Mast Height Fork Lowered (F)		**mm**	2110
Mast Height Fork Raised (H)		**mm**	4270
Overhead Guard Height (G)		**mm**	2110
Operator's Seat Height		**mm**	1045
Turning Radius (C)		**mm**	2500
Load Distance		**mm**	450
Rear Overhang		**mm**	505

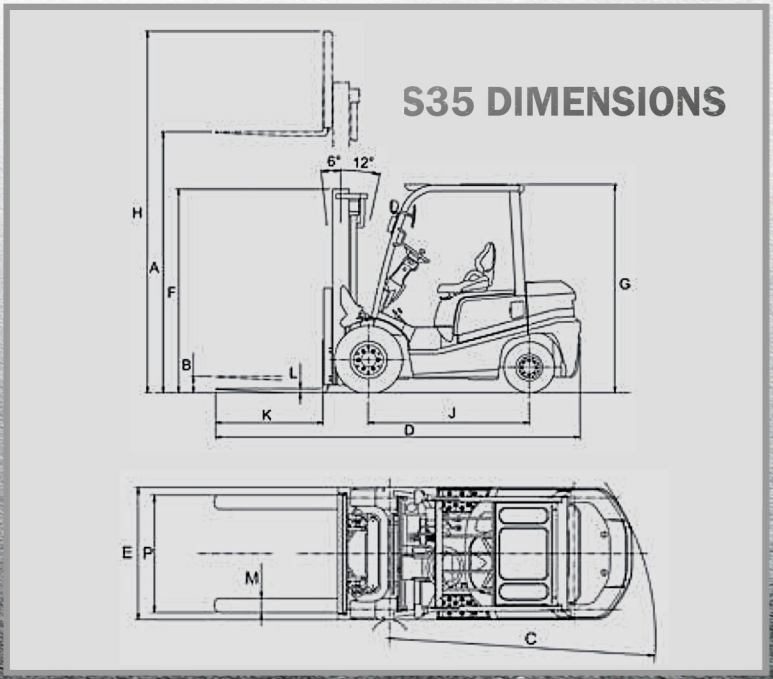

Performance

Speeds	**Max. Travel**	**km/h**	19
	Lifting	**mm/sec**	375
	Lowering	**mm/sec**	450
Max. Drawbar Pull	**Full Load**	**kN**	25.5
	No Load	**kN**	8.3
Max. Gradeability	**Full Load**	**%**	15
	No Load	**%**	20